MOSER SYSTEMELEKTRIK GMBH
CONNECTION COLUMNS ENERGY BOLLARDS
UNDERGROUND DISTRIBUTORS STANDING CABINETS
KERNERSTRASSE 15 74405 GAILDORF GERMANY

PRODUCT DATA SHEET

MS10 Electrical connection column
item no. MB50507677C

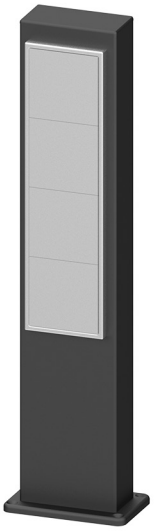

TECHNICAL DATA

Dimensions:	100x50x500mm (WxDxH)
Ingress protection:	IP44
Protection class:	I
Material:	Aluminum, anodized E6/EV1
Color:	anthracite
Equipment:	4 x Protective contact socket 16A 2P+E 230V
Max. back-up fuse:	16A (with RCD on-site 0,03A)
Power supply terminals:	4x3x4qmm
Weight:	approx. 2,8kg

PHONE +49 7971 252-70 FAX +49 7971 252-711
E-MAIL info@moser-systemelektrik.de INTERNET www.moser-systemelektrik.de
LEGAL FORM: GMBH, COMPANY HEAD QUARTER: GAILDORF, REGISTER COURT STUTTGART HRB 756492, VAT-ID: DE815420751,

MOSER SYSTEMELEKTRIK GMBH
CONNECTION COLUMNS ENERGY BOLLARDS
UNDERGROUND DISTRIBUTORS STANDING CABINETS
KERNERSTRASSE 15 74405 GAILDORF GERMANY

PRODUCT DATA SHEET

DIMENSIONS

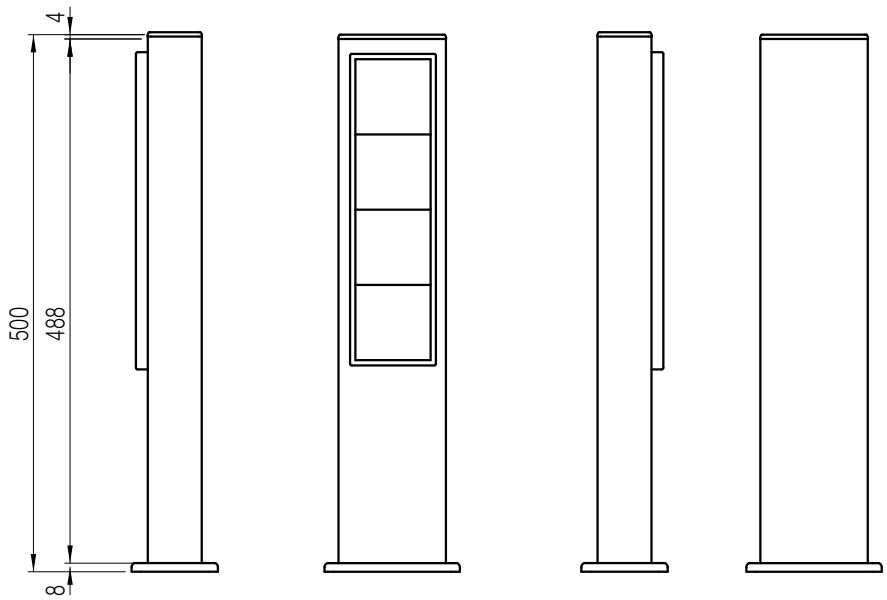

Side D Side A Side C Side B

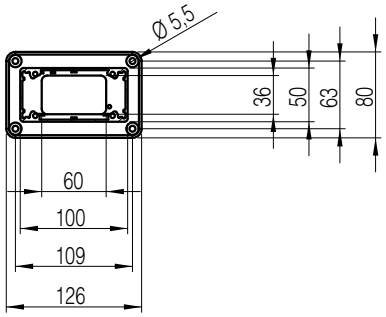

All dimensions in millimeters.

WIRING DIAGRAM

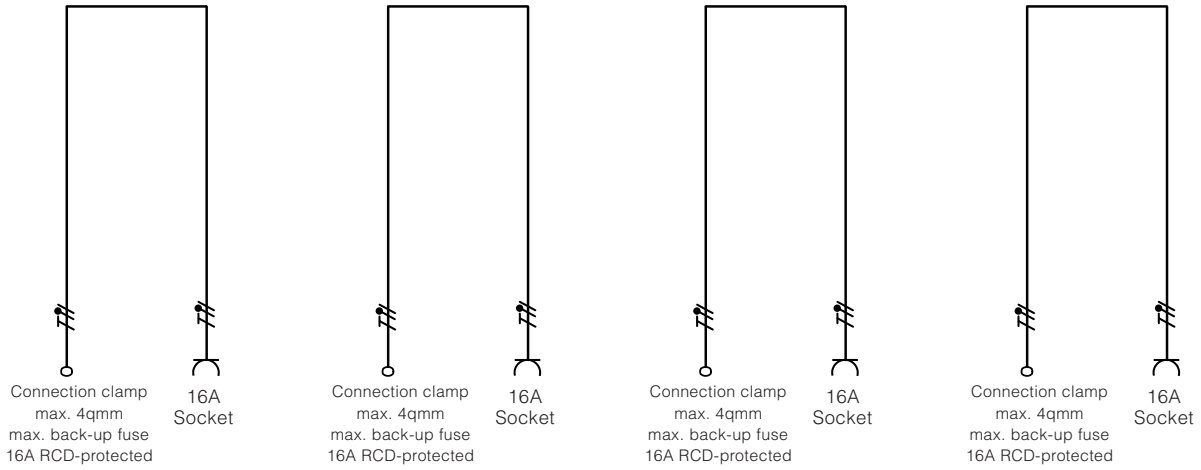

Modifications and errors excepted. No liability accepted for printing errors.
Our terms of delivery and payment apply.

PHONE +49 7971 252-70 FAX +49 7971 252-711
E-MAIL info@moser-systemelektrik.de INTERNET www.moser-systemelektrik.de
LEGAL FORM: GMBH, COMPANY HEAD QUARTER: GAILDORF, REGISTER COURT STUTTGART HRB 756492, VAT-ID: DE815420751,